SECTION A-A

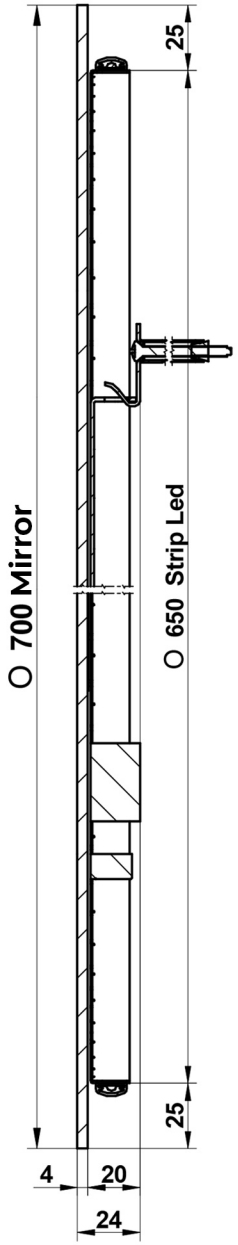

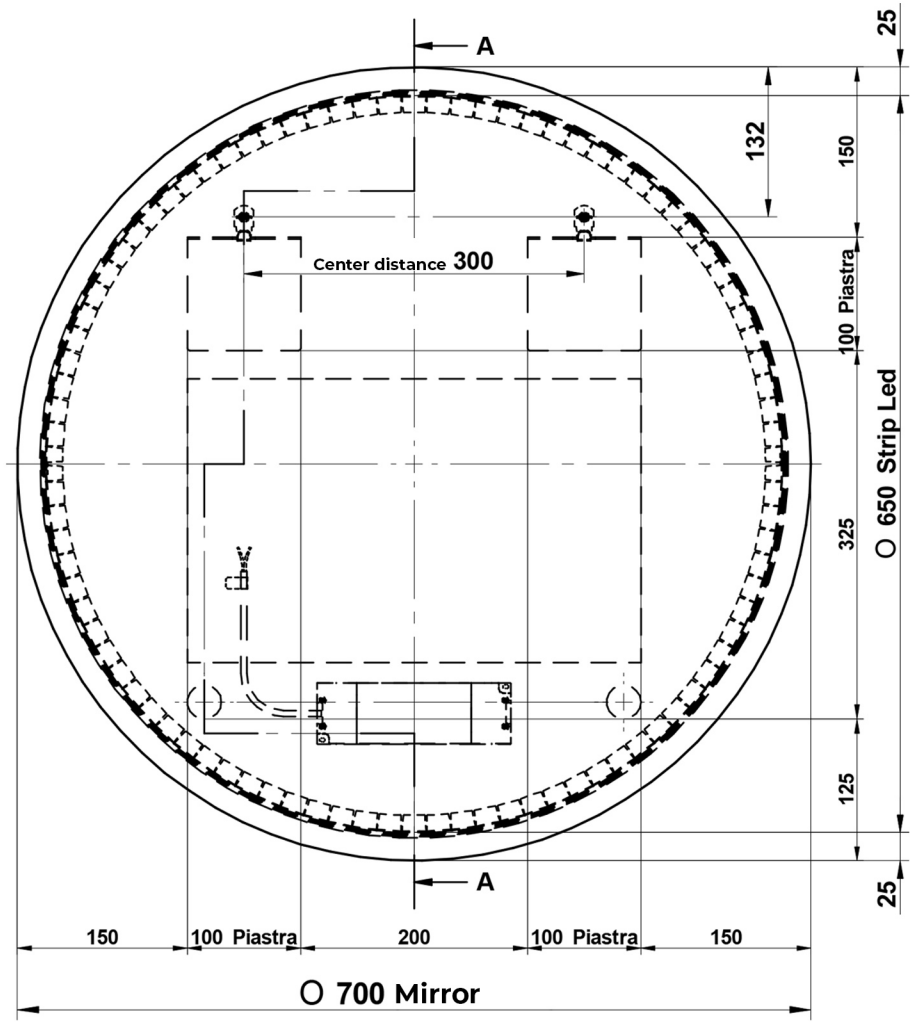

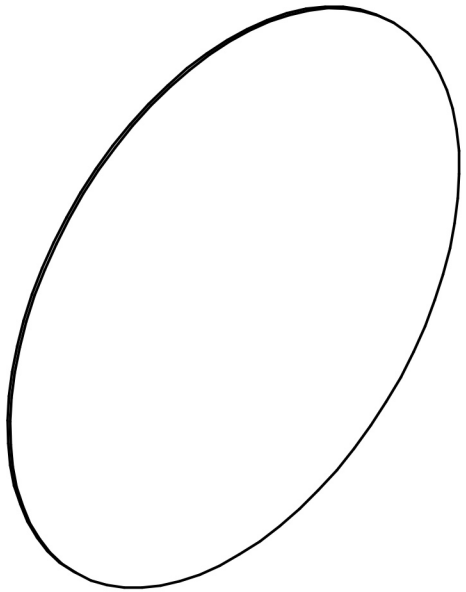

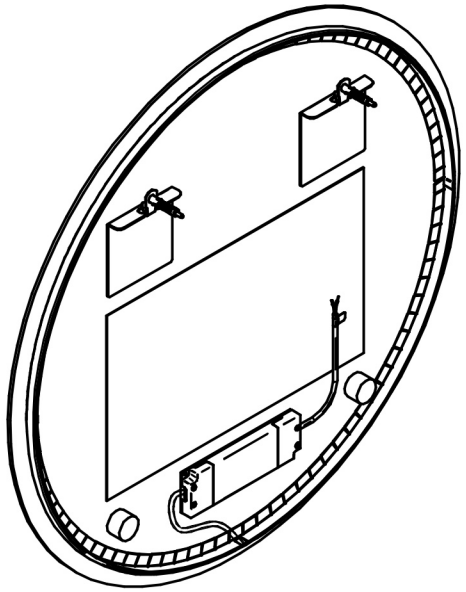

marmy bagno su misura	Name: VANITY round mirror
	Item NR.: 90 11 15 70 70 01
Visible diameter: 70 cm	Technical details: CLII - IP44 - Led 21W - 6000°K - 230V~ 50Hz